Product Description: Pole Hedge Trimmer
Model Number: PTX5100
Service Item Number:F830030003S01
Version:A
Issue Date: 2025/11/11



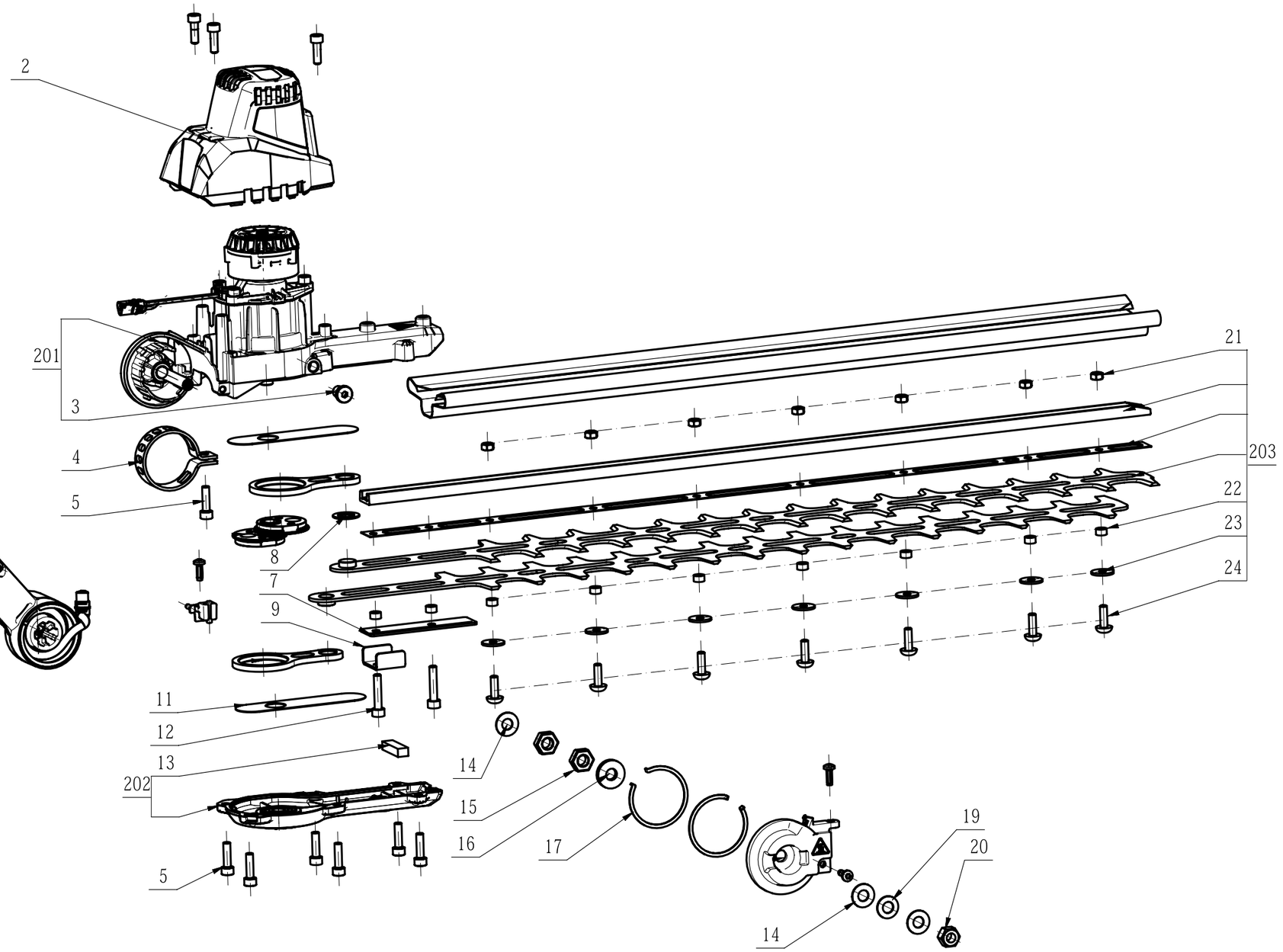

Service Part List_PTX5100_Version A

No.	Product Model#	Part Number	Description	Qty
2	PTX5100	2827735001	Motor Housing Cover Assembly	1
3	PTX5100	5620606001	Hexagon Socket Screw	1
4	PTX5100	3707434001	Lock Ring	1
5	PTX5100	5620446005	Hexagon Socket Screw	7
7	PTX5100	3705991001	Support Plate	1
8	PTX5100	3700335001	Washer	1
9	PTX5100	3706098001	Upper Support Plate	1
11	PTX5100	3700736001	Support Plate	2
12	PTX5100	5620216005	Hexagon Socket Screw	2
13	PTX5100	3706201001	Sponge Pad	1
14	PTX5100	5650569001	Plain Washer	3
15	PTX5100	3580106001	Bushing	2
16	PTX5100	5690488001	Felt Ring	1
17	PTX5100	5650760001	Anti-attrition Washer	2
19	PTX5100	3660652001	Disc Spring	1
20	PTX5100	5630271001	Nut	1
21	PTX5100	5630007006	Prevailing Torque Hexagon Nut	7
22	PTX5100	3580397001	Bushing	7
23	PTX5100	5650487001	Plain Washer	7
24	PTX5100	5620604001	Hexagon Socket Screw	7
201	PTX5100	2790558002	Motor And Gear Case Assembly	1
202	PTX5100	2824873002	Lower Housing ASSY	1
203	PTX5100	2827811002	Blade Set	1