Product Description: Hedge Trimmer
Model Number: HTX6500
Service Item Number:F830022004S01
Version: A
Issue Date: 2025/11/11

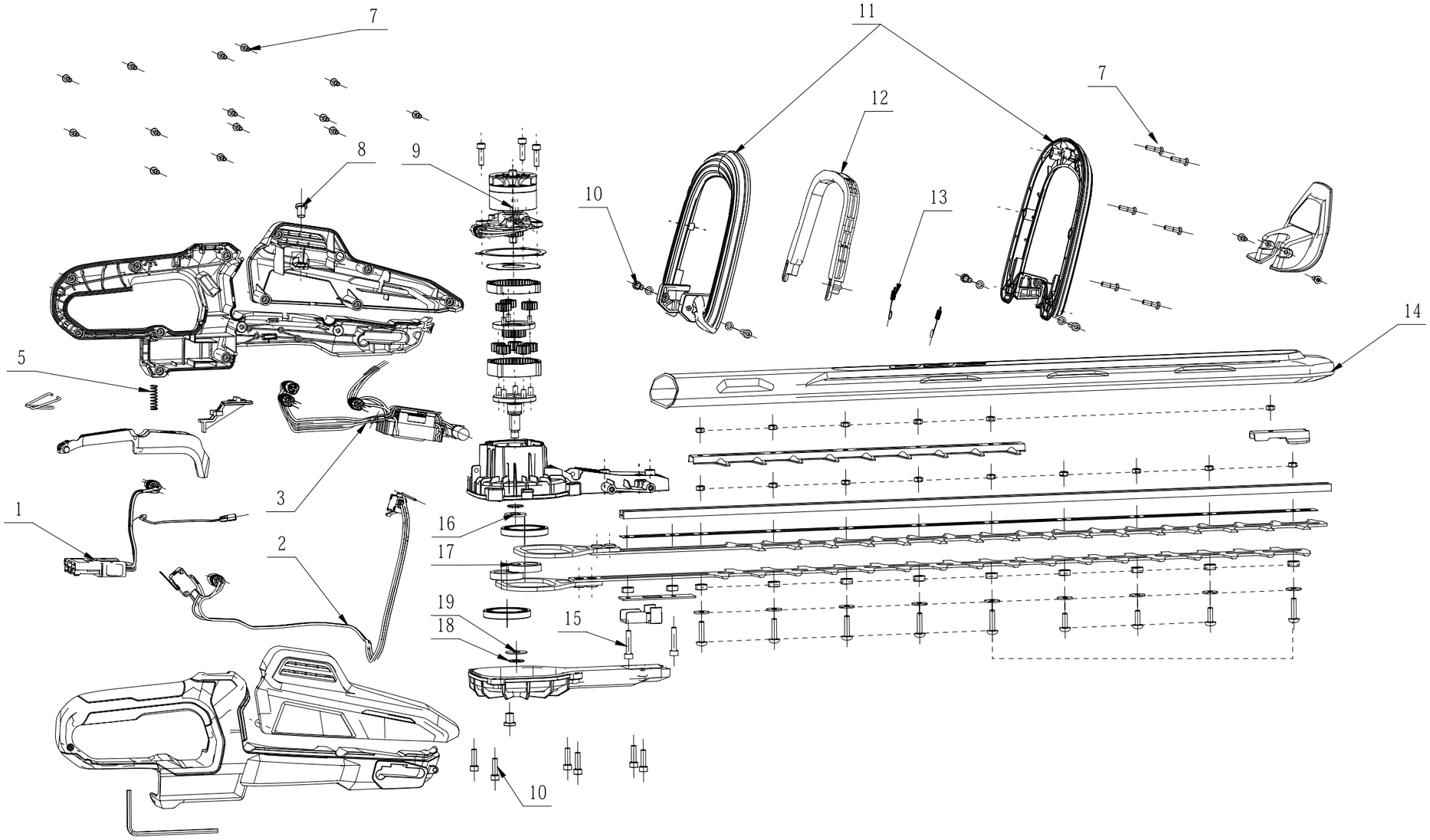

Service Part List_HTX6500_Version A

No.	Product Model#	Part Number	Description	Qty
1	HTX6500	4860466001	Internal Wire ASSY	1
2	HTX6500	2825679001	Switch Assembly	1
3	HTX6500	2830279001	Electric Assembly	1
5	HTX6500	3660076001	Spring	1
7	HTX6500	5620479001	Screw	22
8	HTX6500	5620606001	Hexagon Socket Screw	1
9	HTX6500	2825419001	Motor & Gear ASSY	1
10	HTX6500	5620446004	Hexagon Socket Screw	13
11	HTX6500	3900039001	Side Handle	1
12	HTX6500	3129176001	Switch Trigger	1
13	HTX6500	3660718001	Tension Spring	2
14	HTX6500	3129789001	Sheath	1
15	HTX6500	5620216005	Hexagon Socket Screw	2
16	HTX6500	5650632001	Plain Washer	1
17	HTX6500	3552450001	Eccentric Block	1
18	HTX6500	3660652001	Disc Spring	1
19	HTX6500	5650630001	Plain Washer	1